# 2D Pilot Series

Aperture size：10、14mm

## Pilot Series
## Cost Effective Option

- The Pilot is specific applicated with high speed and high precision, this is the best cost effective scanhead.
- Combination with faster speed and lower overshoot.
- Aperture size:10、14mm.

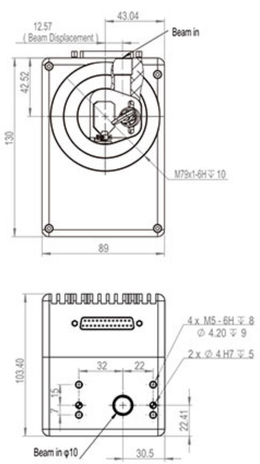


Pilot 10

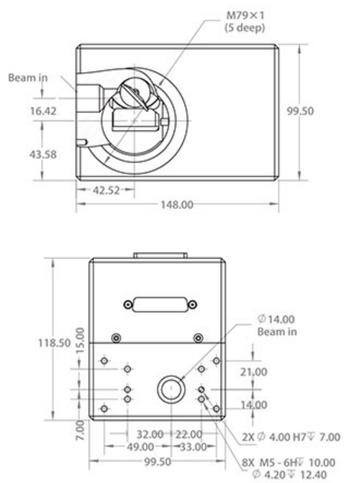


Pilot 14

### Product line

| Type | Version | Weight (KG) | Size (mm) | Input voltage | Output Voltage(VDC) | Current(A) | Protocol |
|---|---|---|---|---|---|---|---|
| Pilot 10 | Standard Version | 1.3 | 130x89x103.4 | 100V60HZ 220V50HZ | ±15 | 5 | XY2-100 Protocol |
| Pilot 14 | Standard Version | 2.9 | 147x120x116 | | | | |

### Optical Specifications

| Type | Aperture size (mm) | Available Wavelength | Optical Material | Optical Surface |
|---|---|---|---|---|
| Pilot 10 | 10 | 355 532 980 / 1064 9400 / 10640 | 1/4λ@633 Partly 1/8λ@633 | Si / QU |
| Pilot 14 | 14 | 355 532 980 / 1064 10640 | 1/4λ@633 | Si / SiC |

### Galvanometer Specifications

| Type | Pilot 10 | Pilot 14 |
|---|---|---|
| Scan Angle(°) | ±10 | ±10 |
| Repeatability(μrad) | 5 | 5 |
| Max.Gain Drift(ppm/k) | 50 | 50 |
| Max.Offset Drift(μrad/k) | 15 | 15 |
| Long-term drift over 8h(mrad) | ≤0.1 | ≤0..08 |
| Tracking Error(μs) | <80 | <210 |
| Step Response Time 1% of Full Scale[1] (μs) | <240 | <390 |
| Typical Marking Speed[2] (m/s) | 5.5 | 4 |
| Typical Positioning Speed[2] (m/s) | 20 | 12 |
| Typical Character Marking[3] (cps) | 750CPS Good Quality 1000CPS Good Writing | 500CPS Good Quality 700CPS Good Writing |

1)1% step response 2)2D scanhead use F160 F-θ lens 3) F160 F-θ lens,1mm height single line character, LenMark software& FEELTEK control card